4bit negedge counter

Diagram:

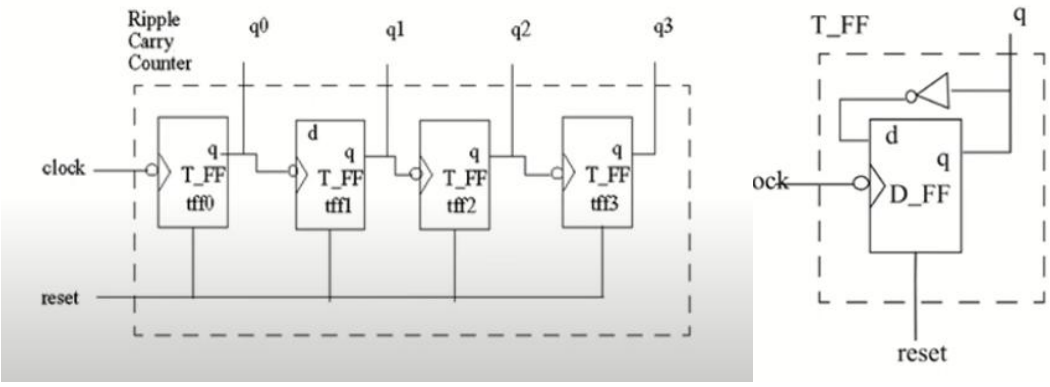

Verilog Code:

```
module d_flipflop (input d, clk, reset, output reg q);
always @(negedge clk or posedge reset)
if(reset) q <= 1'b0;
else q <= d;
endmodule

module t_flipflop (input clk, reset, output q);
wire d;
not n1(d,q);
d_flipflop d (d, clk, reset, q);
endmodule

module neqclk_4bit_0to15_ripcounter (input clk, reset, output [3:0] q);
t_flipflop (clk, reset, q[0]);
t_flipflop (q[0], reset, q[1]);
t_flipflop (q[1], reset, q[2]);
t_flipflop (q[2], reset, q[3]);
endmodule
```

Verilog Code tb:

```
module ripcounter_tb;
reg clk;
reg reset;
wire [3:0] q;
ripcounter uut (
.clk(clk),
.reset(reset),
.q(q)
);
initial
clk = 1;
always #5 clk = ~clk;
initial begin
reset = 1;
#10 reset = 0;
#170 reset = 1;
end
endmodule
```

Simulation:

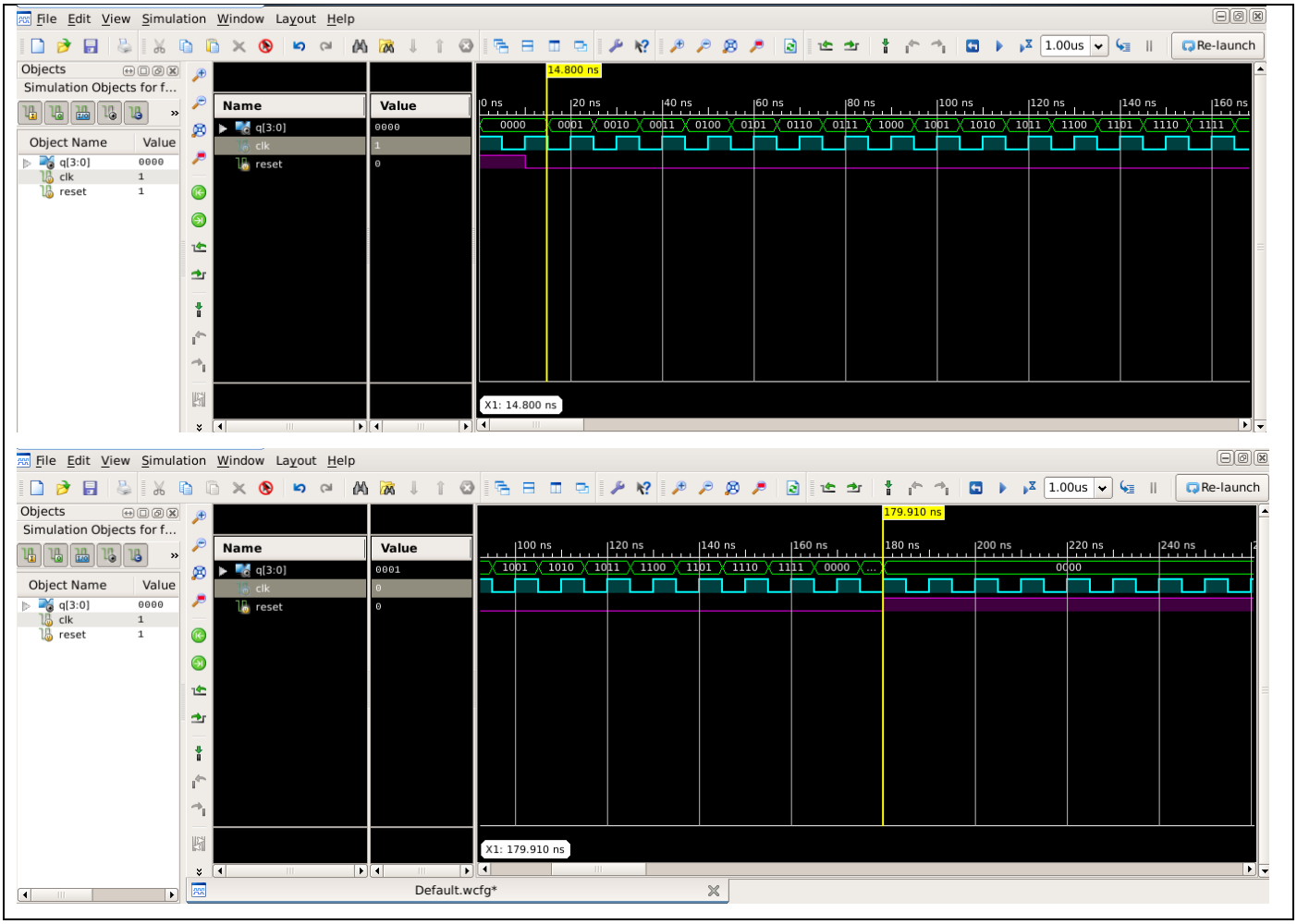
File Edit View Simulation Window Layout Help
Objects
Simulation Objects for f...
Object Name Value
q[3:0] 0000
clk 1
reset 1
Name Value
q[3:0] 0000
clk 1
reset 0
14.800 ns
X1: 14.800 ns
1.00us
Re-launch
File Edit View Simulation Window Layout Help
Objects
Simulation Objects for f...
Object Name Value
q[3:0] 0000
clk 1
reset 1
Name Value
q[3:0] 0001
clk 0
reset 0
179.910 ns
X1: 179.910 ns
Default.wcfg*